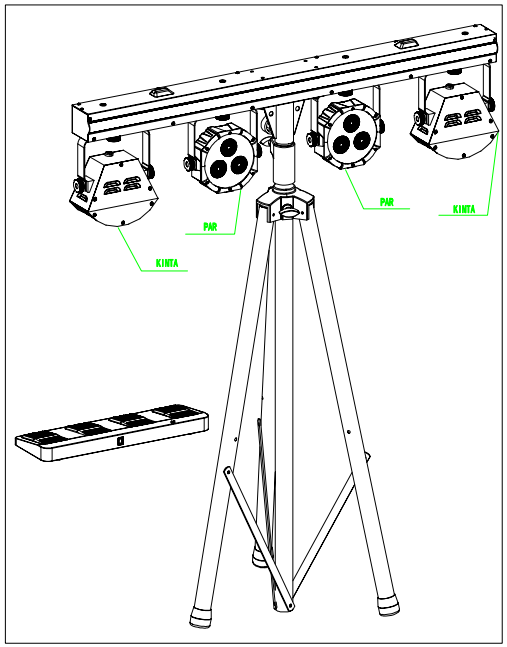

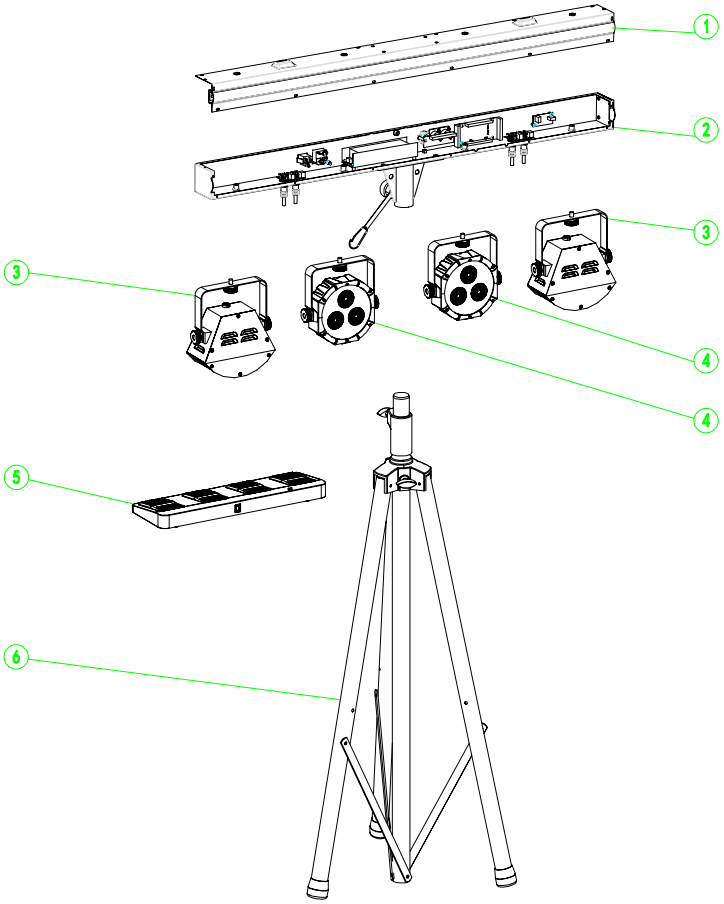

6	2.09.11.0043	Tri-pod stand	1
5	54.81.01.0009	Assembled Footswitch	1
4	53.05.05.0021	Assembled Par	2
3	53.05.06.0010	Assembled Kinta	2
2	53.05.02.0037	Assembled T-Bar (Bottom)	1
1	53.05.01.0018	Assembled T-Bar (Top)	1
MODEL	GigBar3	EDITION	V1.0

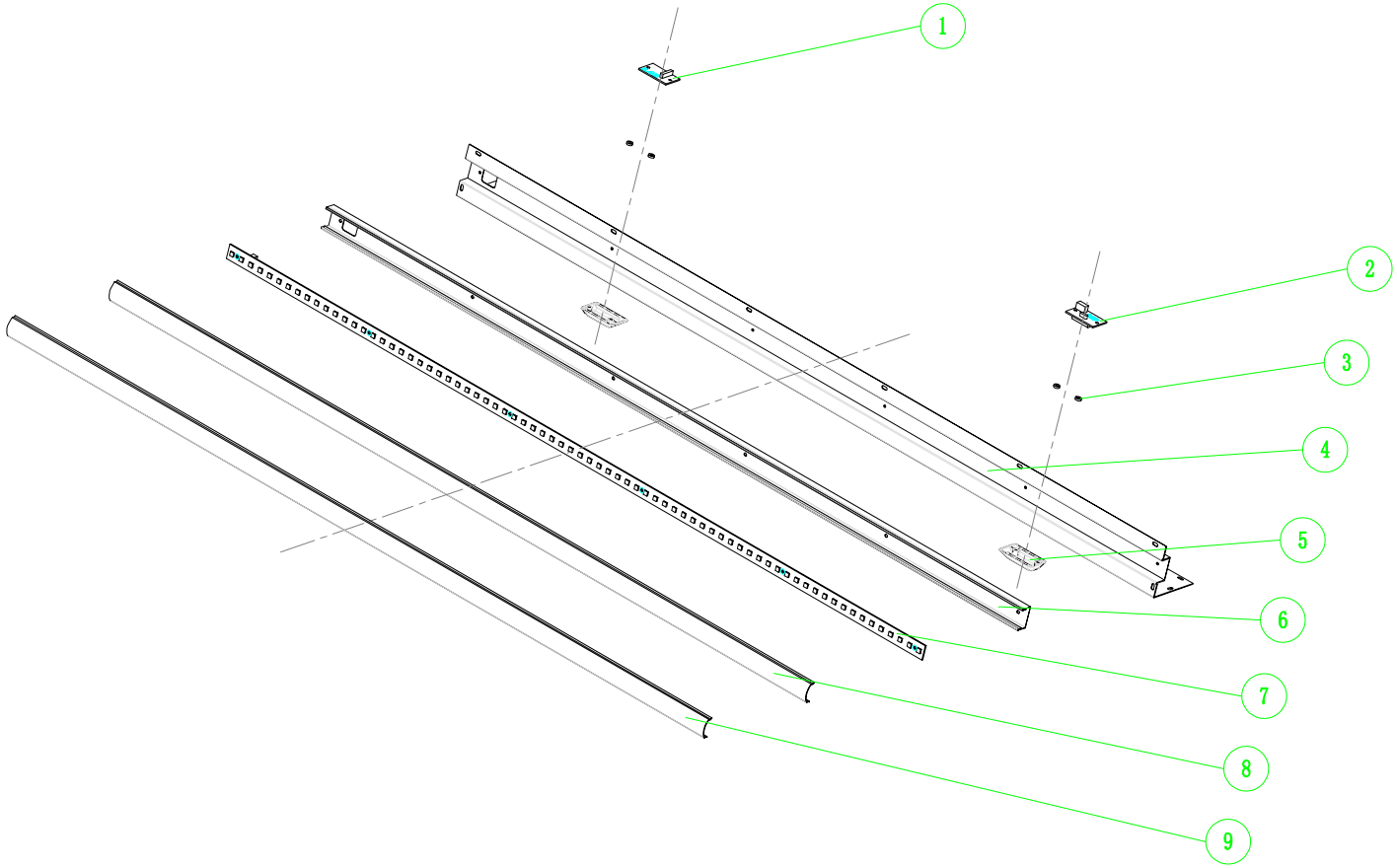

9	2.07.01.0004	Stealth diffuser	1
8	2.07.01.0003	Milky cover	1
7	51.01.02.0104	LED PCB (Strip)	1
6	2.03.01.0123	Aluminum profile casing	1
5	2.06.05.0012	Backplate for the 2.4G wireless module	2
4	2.01.05.0131A	Top cover (T-Bar)	1
3	2.09.10.0043	ABS post_ID3xOD7xH2	4
2	51.02.01.0002	433MHZ wireless module (T-Bar)	1
1	51.02.02.0008	2.4G wireless module (T-Bar)	1

MODEL	GigBar3	EDITION	V1.0

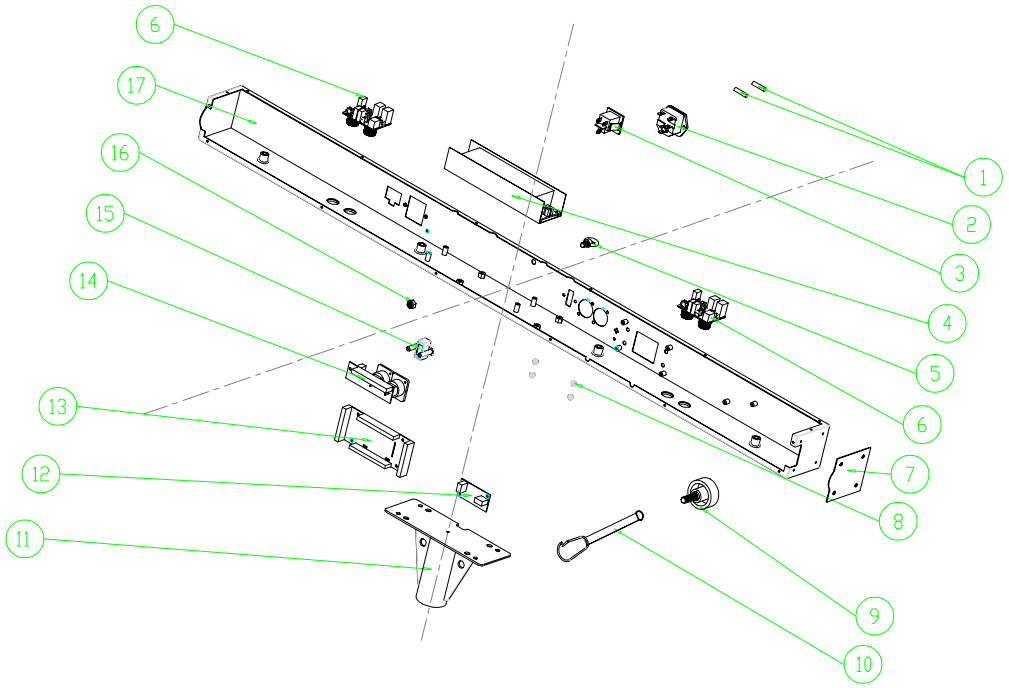

17	2.01.06.0124A	Bottom plate (T-Bar) US	1
16	2.09.07.0016	Hexagon nylon nut_M6_10x6mm	1
15	2.09.12.0010	USB backup plate	1
14	51.01.07.0003	DMX - USB PCB	1
13	57.01.01.0079	Main PCB	1
12	51.01.10.0039	Adapter board_Power5V-Signal	1
11	2.01.03.0003	Tri-pod stand mounter	1
10	2.09.12.0035	Strap for the bracket screw (T-Bar)	1
9	2.09.05.0016	Bracket screw_∅39xH24	1
8	2.09.12.0007	Button knob	4
7	2.01.10.0015	Side plate	1
6	51.01.11.0015	Auxiliary board with 5P connectors	2
5	2.09.06.0008	Saftey loop	1
4	1.30.01.0034	Power supply	1
3	1.21.01.0002	Power socket (output)	1
2	1.21.01.0001	Power socket (input)	1
1	1.29.01.0001	Fuse_ 1.6A_250V	2
MODEL	GigBar3	EDITION	V1.0

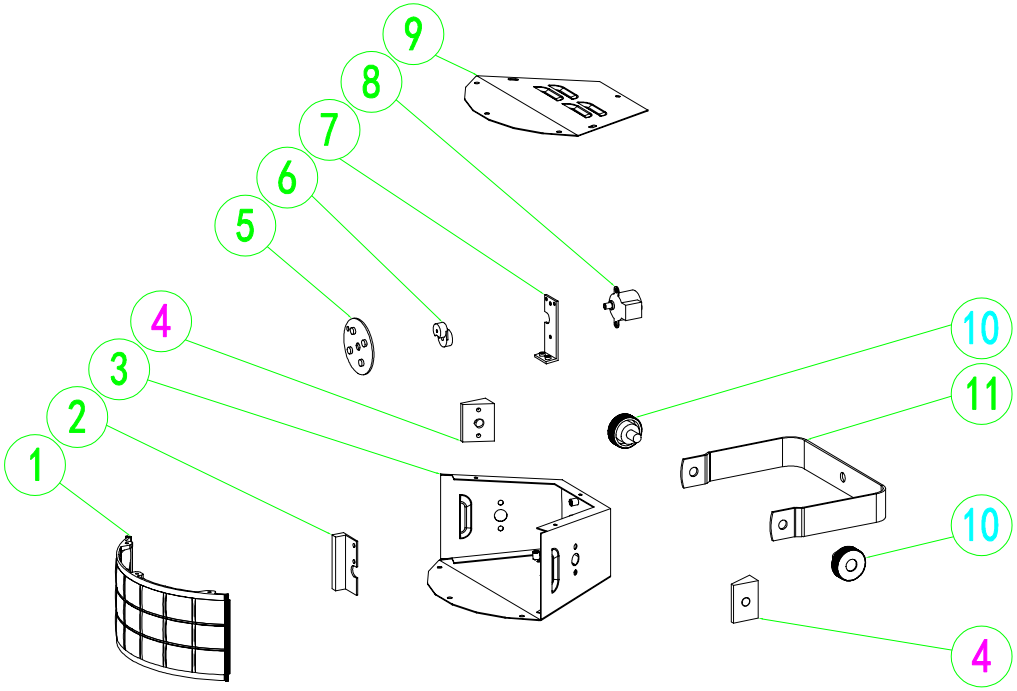

11	2.01.11.0025	Hanging bracket	1
10	2.09.05.0001	Bracket screw_∅30xH15	2
9	2.01.05.0015	Top cover (Kinta)	1
8	1.26.02.0003	Motor (Kinta)	1
7	2.01.12.0040	Motor mounter	1
6	2.06.05.0054	Rotary shaft	1
5	51.01.03.0007	LED PCB (Kinta)	1
4	2.06.05.0053	Bracket mounter	2
3	2.01.06.0012	Bottom cover (Kinta)	1
2	57.01.01.9000	Driver PCB (Kinta)	1
1	2.08.04.0008	LED lens	1

MODEL	GigBar3	EDITION	V1.0

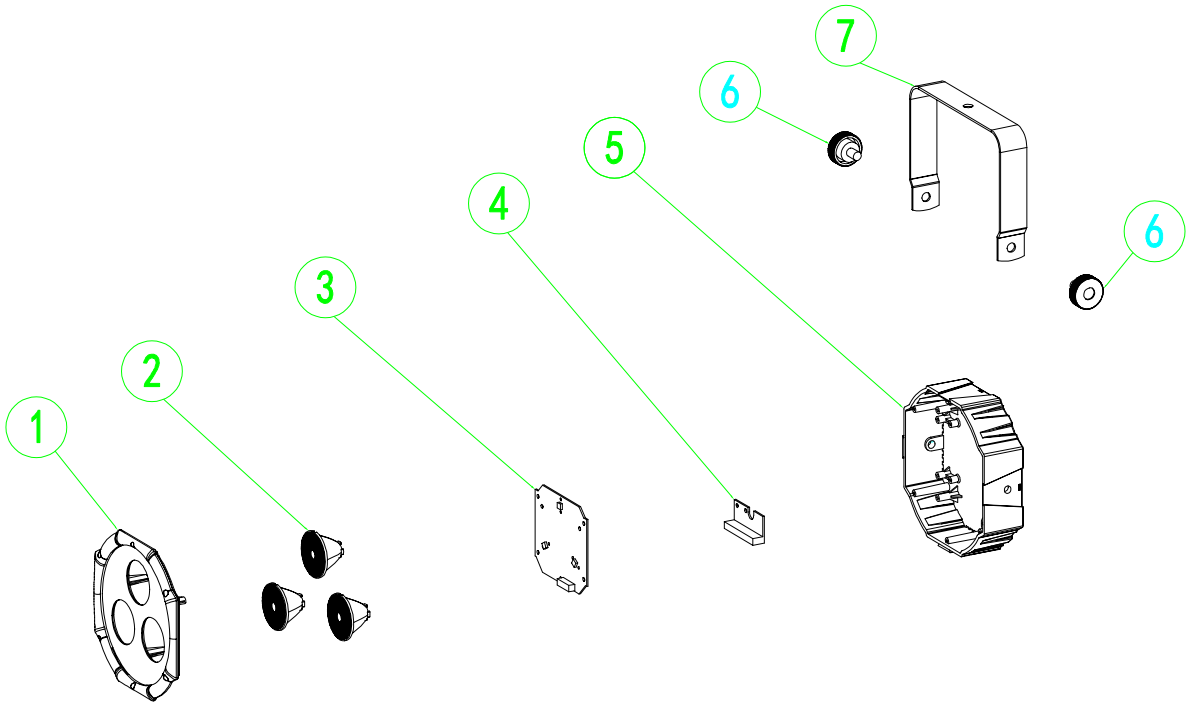

7	2.01.11.0144	Hanging bracket	1
6	2.09.05.0001	Bracket screw_∅30xH15	2
5	2.06.05.0092	Bottom cover (Par)	1
4	57.01.01.9001	Driver PCB (Par)	1
3	51.01.03.0071	LED PCB (Par)	1
2	2.08.01.0063	LED lens (Par)	3
1	2.06.05.0052	Top cover (Par)	1

MODEL	GigBar3	EDITION	V1.0

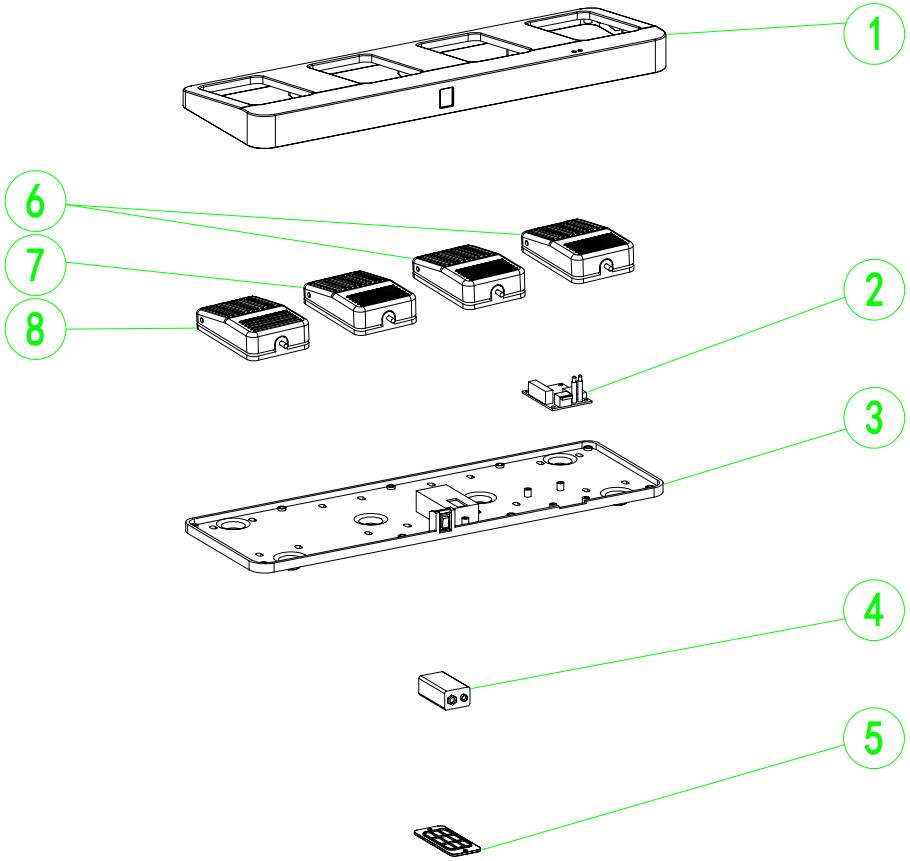

8	55.00.00.0006	Foot pedal with cable_L=350mm	1
7	55.00.00.0004	Foot pedal with cable_L=220mm	1
6	55.00.00.0005	Foot pedal with cable_L=120mm	2
5	2.06.05.0027	Battery cover	1
4	1.25.02.0003	Battery	2
3	2.06.05.0026	Bottom cover (Footswitch)	1
2	51.02.01.0005	433MHZ wireless module (Footswitch)	1
1	2.06.05.0025	Top cover (Footswitch)	1

MODEL	GigBar3	EDITION	V1.0

EXPLODED DIAGRAM REF STATIC	FIXTURE	PART NUMBER	DESCRIPTION
	GIGBAR3ILS	PTK209050001Z	Bracket screw_ 30xH15
	GIGBAR3ILS	PTK209080022	Clear washer
	GIGBAR3ILS	PTK209070017	Hexagon nylon nut
	GIGBAR3ILS	PTK209050016	Bracket screw_ 39xH24
	GIGBAR3ILS	PTK209120035 Z	Strap for the bracket screw (T-Bar)
	GIGBAR3ILS	PTK209010014Z	Screw_PB_3x8mm
	GIGBAR3ILS	PTK209010033Z	Screw_PM3x6mm
	GIGBAR3ILS	PTK209080002Z	Lock washer_ID3xOD6mm
	GIGBAR3ILS	PTK209020032Z	Washer_Φ3
	GIGBAR3ILS	PTK209010140Z	Screw_PM3x8mm
	GIGBAR3ILS	PTK302050004Z	Washer_ID6xOD12xH0.8mm
	GIGBAR3ILS	PTK209020076Z	Screw__KM3x6mm
	GIGBAR3ILS	PTK209010001Z	Screw_PM3x6mm
	GIGBAR3ILS	PTK209010014Z	Screw_PB_3x8mm
	GIGBAR3ILS	PTZ209020006Z	Screw_KB3x8mm
	GIGBAR3ILS	PTK209030080Z	Hexagon nylon nut_M5x12mm
	GIGBAR3ILS	PTK209080034Z	Washer_Φ5
	GIGBAR3ILS	PTK209040050Z	Screw_PWM3x6mm
	GIGBAR3ILS	PTK209010038Z	Screw_PM3x14mm
	GIGBAR3ILS	PTK209080002Z	Lock washer_ID3xOD6mm
	GIGBAR3ILS	PTK209020032Z	Washer_Φ3
	GIGBAR3ILS	PTK209070011Z	Hexagon nut_M3_5.5x2.4mm
	GIGBAR3ILS	PTK209070015Z	Hexagon nylon nut_M3_5.5x4mm
	GIGBAR3ILS	PTK132010014Z	Wire Harness with flag terminal_2 Pin_14AWG_100mm_Black and White
	GIGBAR3ILS	PTK132010021Z	Wire Harness with flag terminal_3 Pin_14AWG
	GIGBAR3ILS	PTK132020393Z	Wire Harness_2 Pin_20AWG_300mm_Red and Black
	GIGBAR3ILS	PTK132020454	Wire Harness_3 Pin_26AWG_200mm_Black
	GIGBAR3ILS	PTK132020001Z	Wire Harness_3 Pin_22AWG_150mm_Black
	GIGBAR3ILS	PTK132020062Z	Wire Harness_2 Pin_20AWG_400mm_Red and Black
	GIGBAR3ILS	PTK132020013	Wire Harness_4 Pin_22AWG_150mm_Black
	GIGBAR3ILS	PTK132020625Z	Wire Harness_3 Pin_22AWG_100mm_Black
	GIGBAR3ILS	PTK132020623Z	Wire Harness_3 Pin_26AWG_700mm_Black
	GIGBAR3ILS	PTK132020134Z	Wire Harness_10 Pin_26AWG_200mm_Colored
	GIGBAR3ILS	PTK132020143Z	Wire Harness_3 Pin_26AWG_200mm_Black
	GIGBAR3ILS	PTK132020624Z	Wire Harness_3 Pin_26AWG_700mm_Black
	GIGBAR3ILS	PTK132020039Z	Wire Harness_2 Pin_20AWG_350mm_Red and Black
	GIGBAR3ILS	PTK209100093Z	Nylon washer_ID3.2xOD5xH4
	GIGBAR3ILS	PTK209100061Z	Nylon post
	GIGBAR3ILS	PTK209080048Z	Washer_ID3xOD8xH1
	GIGBAR3ILS	PTK209040016Z	Screw_PWM3x8mm
	GIGBAR3ILS	PTK209040036Z	Screw_PWA3x8mm
	GIGBAR3ILS	PTK209010033Z	Screw_PM3x6mm
	GIGBAR3ILS	PTK209020032Z	Washer_Φ3
	GIGBAR3ILS	PTK209040043Z	Screw_PWM2.5x8mm
	GIGBAR3ILS	PTK209040061Z	Screw_PWA4x8mm
	GIGBAR3ILS	PTK209040035Z	Screw_PWA3x12mm
	GIGBAR3ILS	PTK302050009Z	Nylon zip tie
	GIGBAR3ILS	PTK209120011Z	wire harness retainer
	GIGBAR3ILS	PTK209120050Z	Cable clamp
	GIGBAR3ILS	PTK209080022	Washer_ID8xOD18xH2
	GIGBAR3ILS	PTK132020212Z	Wire Harness_5 Pin_22AWG_150mm_Colored
	GIGBAR3ILS	PTK132060002Z	Wire Harness with 5P connector
	GIGBAR3ILS	PTK121070007Z	Connectors for the Kinta Driver PCB
	GIGBAR3ILS	PTK209010012Z	Screw_PB_3x12mm
	GIGBAR3ILS	PTK209010014Z	Screw_PB_3x8mm

	GIGBAR3ILS	PTK209120011Z	wire harness retainer
	GIGBAR3ILS	PTK209080022	Clear washer
	GIGBAR3ILS	PTK132020075Z	Wire Harness_6 Pin_22AWG_100mm_Colored
	GIGBAR3ILS	PTK132060002Z	Wire Harness with 5P connector
	GIGBAR3ILS	PTK121070008Z	Connectors for the Par Driver PCB
	GIGBAR3ILS	PTK209010014Z	Screw_PB_3x8mm
	GIGBAR3ILS	PTK132020064Z	Wire Harness_2 Pin_22AWG_300mm_Red and Black
	GIGBAR3ILS	PTK122010001Z	switch (on-off button)
	GIGBAR3ILS	PTZ209020006Z	Screw_KB3x8mm
	GIGBAR3ILS	PTK209020050Z	Screw_KA4x12mm
	GIGBAR3ILS	PTK132020065Z	Wire Harness_2 Pin_22AWG_200mm_Red and Black
	GIGBAR3ILS	PTK209010051Z	Screw_PM4x8mm
	GIGBAR3ILS	PTK131010018Z	Power cable (US)
	GIGBAR3ILS	PTK131010015Z	Power cable (UK)
	GIGBAR3ILS	PTK131010016Z	Power cable (EU)
	GIGBAR3ILS	PTK131010019Z	Power cable (AU)
	GIGBAR3ILS	PTK403050059Z	Color box
	GIGBAR3ILS	PTK403050060Z	Outer box
	GIGBAR3ILS	PTK406050036Z	Carry bag
N/A	GIGBAR3ILS	PTK132010018Z	Wire Harness with flag terminal_2 Pin_18AWG
N/A	GIGBAR3ILS	PTK132020026Z	Wire Harness_6 Pin_26AWG_150mm_Black
1	GIGBAR3ILS	PTK5102020008Z	2.4G wireless module (T-Bar) (Assemble T-Bar (Top) BOM#1)
1	GIGBAR3ILS	PTK129010001Z	Fuse_ 1.6A_250V (Assembled T-Bar (Bottom) BOM#1)
1	GIGBAR3ILS	PTK208040008Z	LED lens (Assembled Kinta BOM#1)
1	GIGBAR3ILS	PTK206050052Z	Top cover (Par) (Assembled Par BOM#1)
1	GIGBAR3ILS	PTK206050025Z	Top cover (Footswitch) (Assembled Footswitch BOM#1)
1	GIGBAR3ILS	PTK5305010018Z	Assembled T-Bar (Top)
10	GIGBAR3ILS	PTK209120035 Z	Strap for the bracket screw (T-Bar) (Assembled T-Bar (Bottom) BOM#10)
10	GIGBAR3ILS	PTK209050001Z	Bracket screw_Ø30xH15 (Assembled Kinta BOM#10)
11	GIGBAR3ILS	PTK201030003Z	Tri-pod stand mounter (Assembled T-Bar (Bottom) BOM#11)
11	GIGBAR3ILS	PTK201110025Z	Hanging bracket (Assembled Kinta BOM#11)
12	GIGBAR3ILS	PTK5101100039Z	Adapter board_Power5V-Signal (Assembled T-Bar (Bottom) BOM#12)
13	GIGBAR3ILS	PTK5701010079Z	Main PCB (Assembled T-Bar (Bottom) BOM#13)
14	GIGBAR3ILS	PTK5101070003Z	DMX - USB PCB (Assembled T-Bar (Bottom) BOM#14)
15	GIGBAR3ILS	PTK209120010Z	USB backup plate (Assembled T-Bar (Bottom) BOM#15)
16	GIGBAR3ILS	PTK209070016	Hexagon nylon nut_M6_10x6mm (Assembled T-Bar (Bottom) BOM#16)
17	GIGBAR3ILS	PTK201060124AZ	Bottom plate (T-Bar) US (Assembled T-Bar (Bottom) BOM#17)
2	GIGBAR3ILS	PTK5102010002Z	433MHZ wireless module (T-Bar) (Assemble T-Bar (Top) BOM#2)
2	GIGBAR3ILS	PTK121010001Z	Power socket (input) (Assembled T-Bar (Bottom) BOM#2)
2	GIGBAR3ILS	PTK5701019000Z	Driver PCB (Kinta) (Assembled Kinta BOM#2)
2	GIGBAR3ILS	PTK208010063Z	LED lens (Par) (Assembled Par BOM#2)
2	GIGBAR3ILS	PTK5102010005Z	433MHZ wireless module (Footswitch) (Assembled Footswitch BOM#2)
2	GIGBAR3ILS	PTK5305020037Z	Assembled T-Bar (Bottom)
3	GIGBAR3ILS	PTK209100043Z	ABS post_ID3xOD7xH2 (Assemble T-Bar (Top) BOM#3)
3	GIGBAR3ILS	PTK121010002Z	Power socket (output) (Assembled T-Bar (Bottom) BOM#3)
3	GIGBAR3ILS	PTK201060012Z	Bottom cover (Kinta) (Assembled Kinta BOM#3)
3	GIGBAR3ILS	PTK5101030071Z	LED PCB (Par) (Assembled Par BOM#3)
3	GIGBAR3ILS	PTK206050026Z	Bottom cover (Footswitch) (Assembled Footswitch BOM#3)
3	GIGBAR3ILS	PTK5305060010Z	Assembled Kinta
4	GIGBAR3ILS	PTK201050131AZ	Top cover (T-Bar) (Assemble T-Bar (Top) BOM#4)
4	GIGBAR3ILS	PTK130010034Z	Power supply (Assembled T-Bar (Bottom) BOM#4)
4	GIGBAR3ILS	PTK206050053Z	Bracket mounter (Assembled Kinta BOM#4)
4	GIGBAR3ILS	PTK5701019001Z	Driver PCB (Par) (Assembled Par BOM#4)
4	GIGBAR3ILS	PTK125020003Z	Battery (Assembled Footswitch BOM#4)
4	GIGBAR3ILS	PTK5305050021Z	Assembled Par
5	GIGBAR3ILS	PTK206020023Z	Backplate for the 2.4G wireless module (Assemble T-Bar (Top) BOM#5)
5	GIGBAR3ILS	PTK209060008	Saftey loop (Assembled T-Bar (Bottom) BOM#5)
5	GIGBAR3ILS	PTK5101030007Z	LED PCB (Kinta) (Assembled Kinta BOM#5)

5	GIGBAR3ILS	PTK206050092Z	Bottom cover (Par) (Assembled Par BOM#5)
5	GIGBAR3ILS	PTK206050027Z	Battery cover (Assembled Footswitch BOM#5)
5	GIGBAR3ILS	PTK5481010009Z	Assembled Footswitch
6	GIGBAR3ILS	PTK209110043Z	Tri-pod stand (BOM#6)
6	GIGBAR3ILS	PTK203010123Z	Aluminum profile casing (Assemble T-Bar (Top) BOM#6)
6	GIGBAR3ILS	PTK5101110015Z	Auxiliary board with 5P connectors (Assembled T-Bar (Bottom) BOM#6)
6	GIGBAR3ILS	PTK206050054Z	Rotary shaft (Assembled Kinta BOM#6)
6	GIGBAR3ILS	PTK209050001Z	Bracket screw_Ø30xH15 (Assembled Par BOM#6)
6	GIGBAR3ILS	PTK5500000005Z	Foot pedal with cable_L=120mm (Assembled Footswitch BOM#6)
7	GIGBAR3ILS	PTK5101020104Z	LED PCB (Strip) (Assemble T-Bar (Top) BOM#7)
7	GIGBAR3ILS	PTK201100015Z	Side plate (Assembled T-Bar (Bottom) BOM#7)
7	GIGBAR3ILS	PTK201120040Z	Motor mounter (Assembled Kinta BOM#7)
7	GIGBAR3ILS	PTK201110144Z	Hanging bracket (Assembled Par BOM#7)
7	GIGBAR3ILS	PTK5500000004Z	Foot pedal with cable_L=220mm (Assembled Footswitch BOM#7)
8	GIGBAR3ILS	PTK207010003Z	Milky cover (Assemble T-Bar (Top) BOM#8)
8	GIGBAR3ILS	PTK209120007Z	Button knob (Assembled T-Bar (Bottom) BOM#8)
8	GIGBAR3ILS	PTK126020003Z	Motor (Kinta) (Assembled Kinta BOM#8)
8	GIGBAR3ILS	PTK5500000006Z	Foot pedal with cable_L=350mm (Assembled Footswitch BOM#8)
9	GIGBAR3ILS	PTK207010004Z	Stealth diffuser (Assemble T-Bar (Top) BOM#9)
9	GIGBAR3ILS	PTK209050016	Bracket screw_Ø39xH24 (Assembled T-Bar (Bottom) BOM#9)
9	GIGBAR3ILS	PTK201050015Z	Top cover (Kinta) (Assembled Kinta BOM#9)
N/A	GIGBAR3ILS	PTK132010017Z	Wire Harness_3 Pin_18AWG_150mm_Yellow and Green